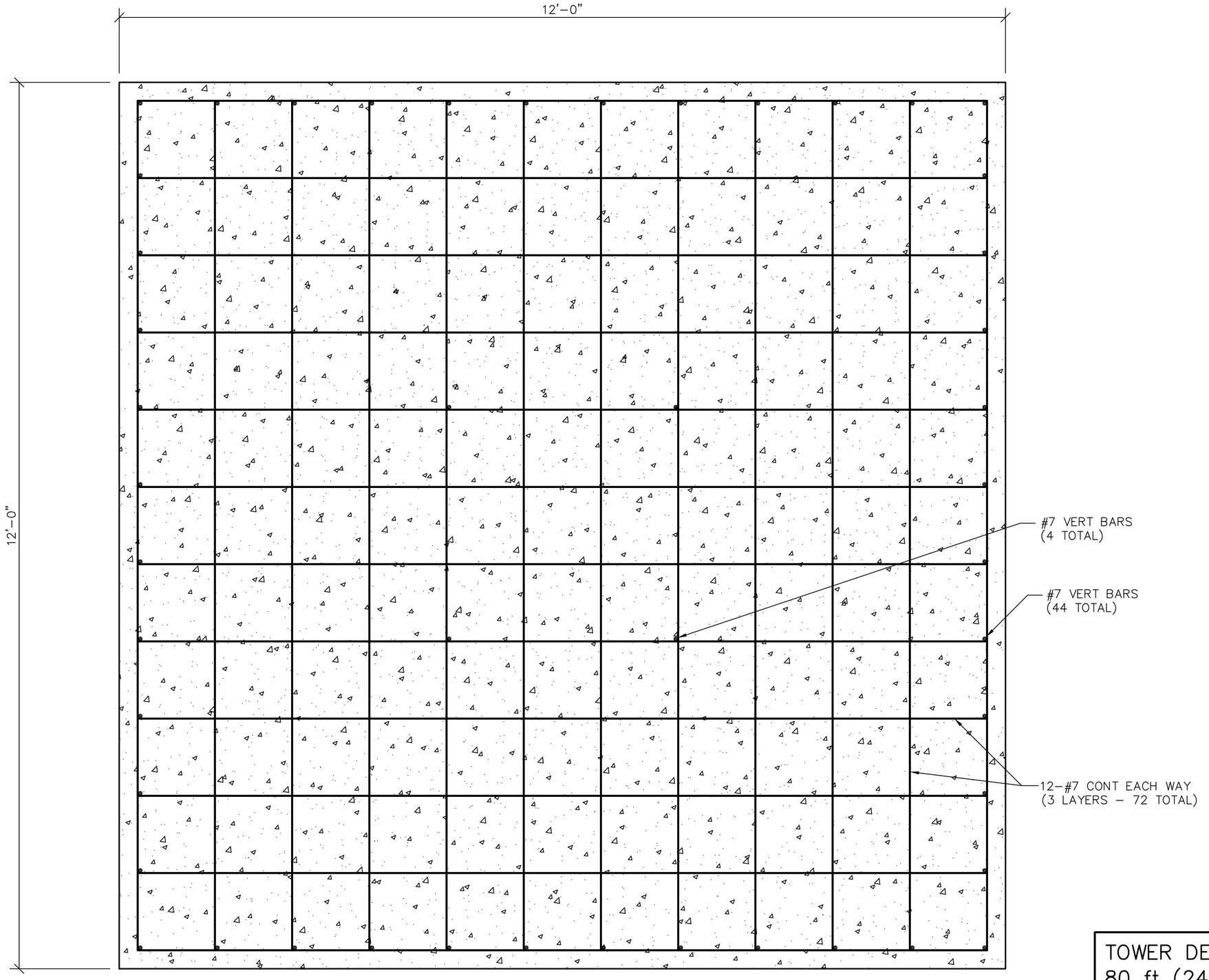

PLAN VIEW
SCALE: 1"=1'-0"

TOWER DESIGN LOADS:
80 ft (24m) TOWER

TOWER DESIGN BASE REACTION FORCES USED FOR FOUNDATION DESIGN AS PROVIDED BY A.R.E. WIND TOWER FOUNDATION FOR KESTRAL TURBINES.
P = 5.6 kips
M = 250.3 K-ft.
V = 5.1 kips
SHEAR AND MOMENT LOADS ARE APPLICABLE IN ALL DIRECTIONS ABOUT BASE.

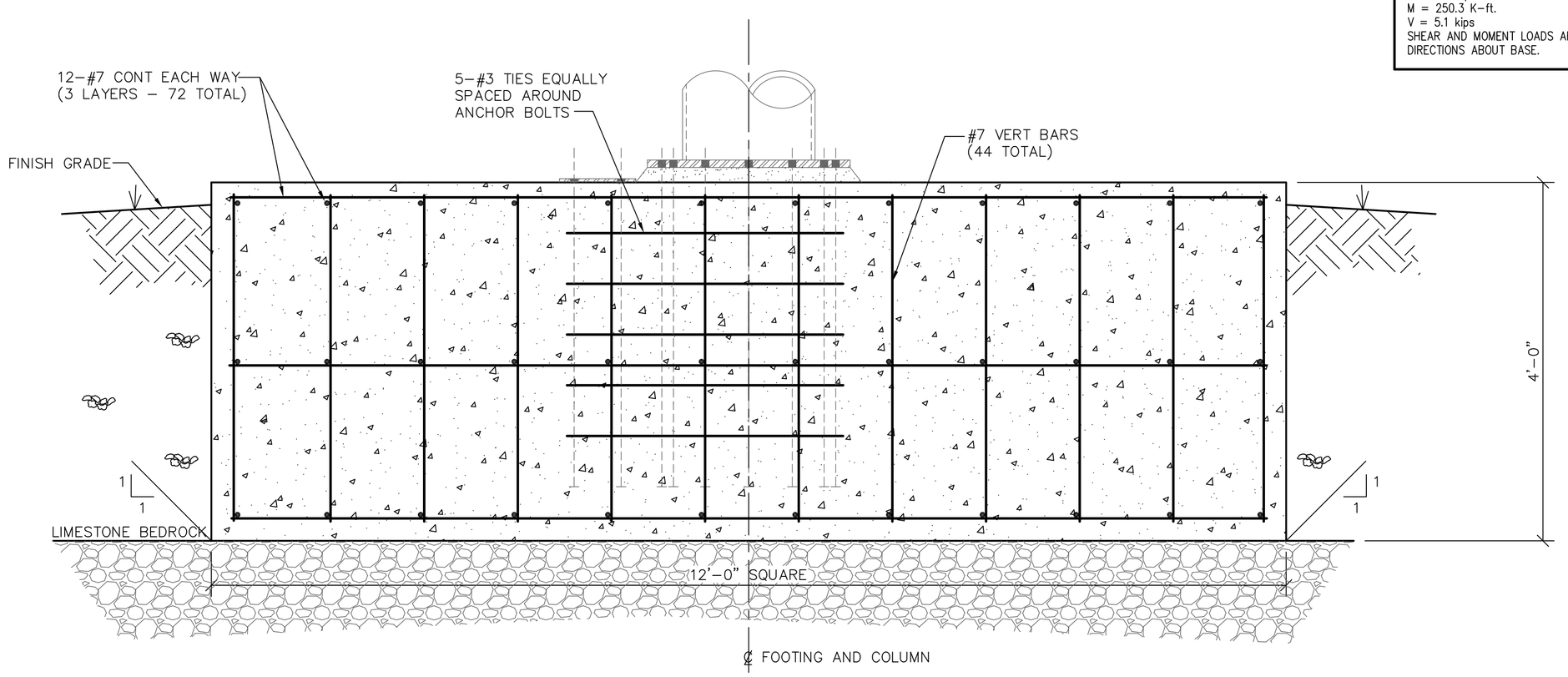

1 SPREAD FOOTING SECTION
SCALE: 1"=1'-0"

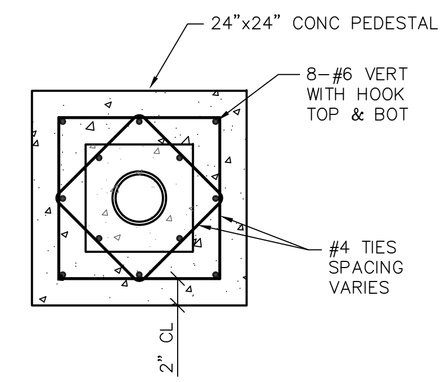

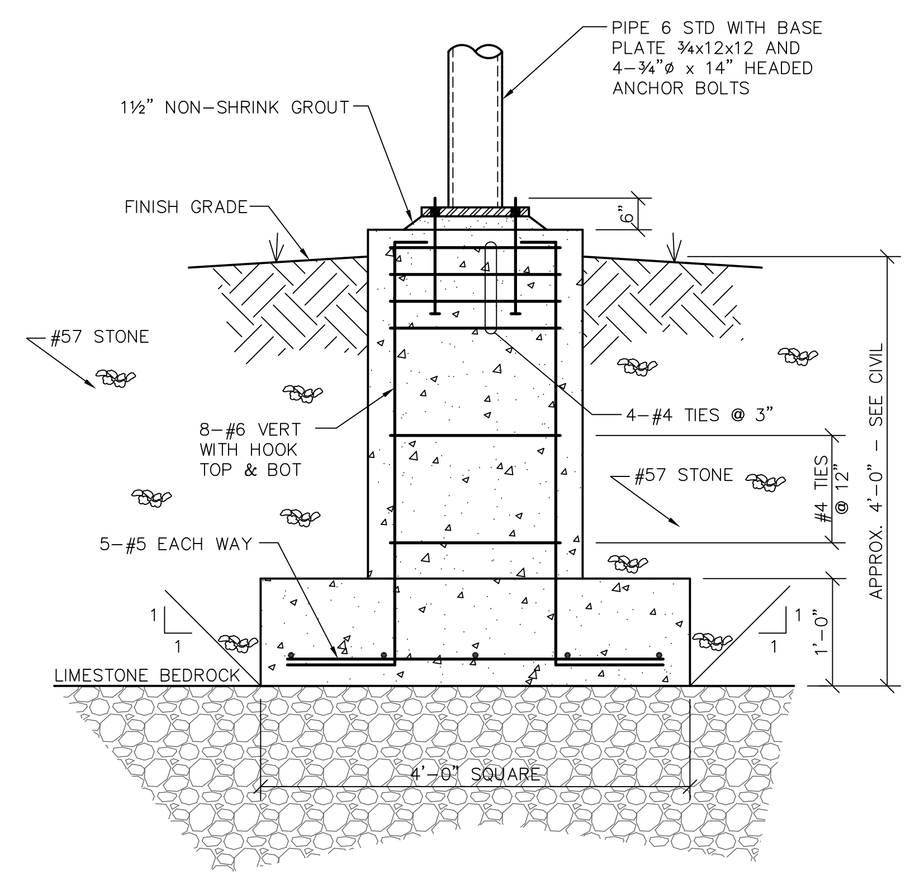

2 FOOTING AND PEDESTAL SECTION
SCALE: 1"=1'-0"

LPE JOB NO.: 11026.01
ISSUE DATE: 08/15/11
DRAWN BY: ALJ
CHECKED BY: NRP

REVISION:

Consulting Engineers
630 Southgate Ave., Suite C
Nashville, Tennessee 37203
(615) 726-2902 Phone
(615) 726-4990 Fax
www.loganpatriengineering.com

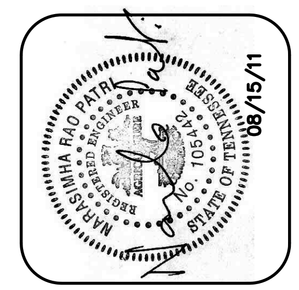

WIND TOWER FOUNDATION
KESTREL e400i - 80' TOWER
SPREAD FOOTING OPTION

SHEET NUMBER
S200